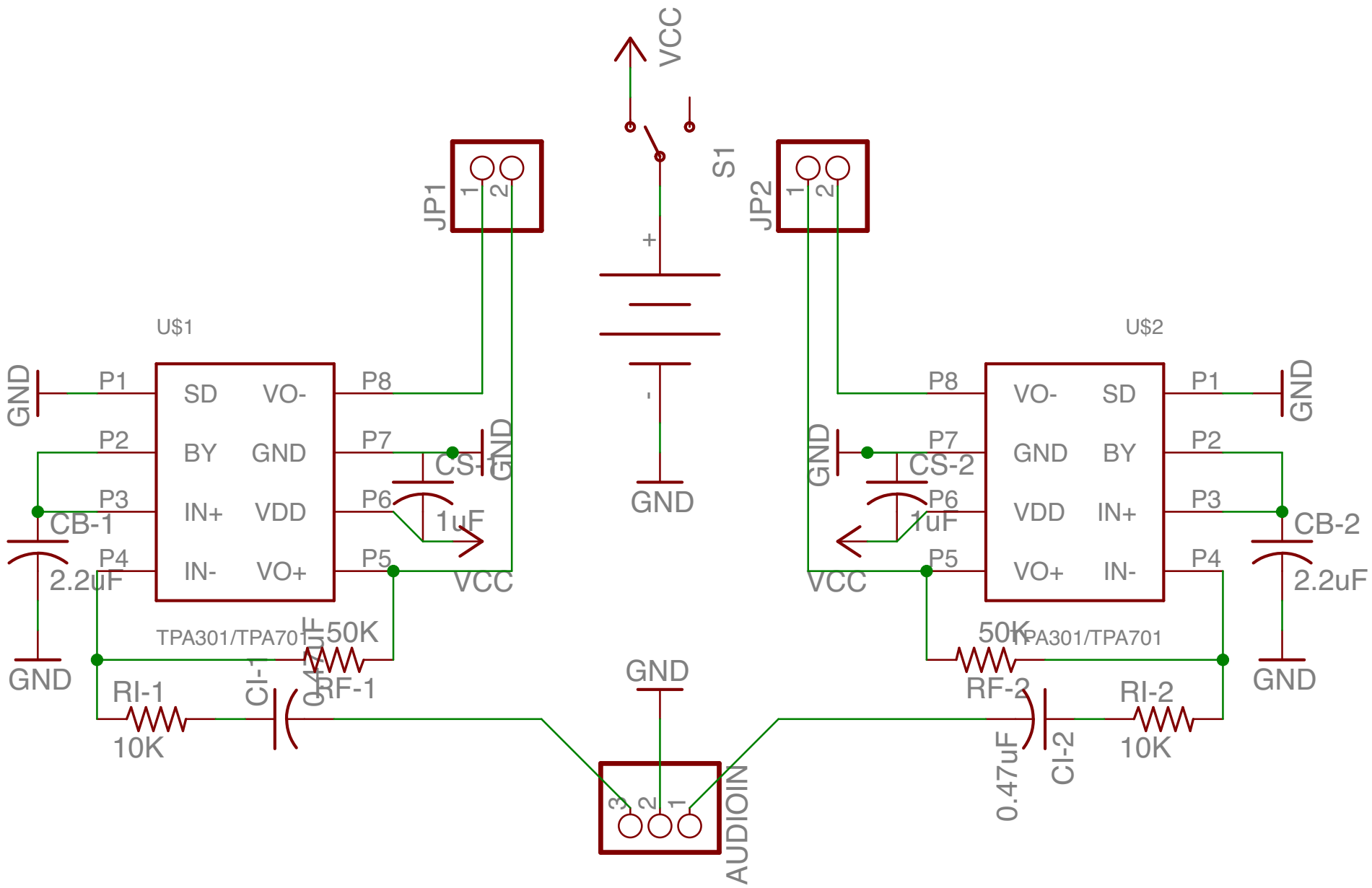
VCC
S1
+
-
GND
JP1
JP2
U$1
U$2
SD
VO-
BY
GND
IN+
VDD
IN-
VO+
P1
P2
P3
P4
P5
P6
P7
P8
CS-1
CS-2
1uF
CB-1
CB-2
2.2uF
TPA301/TPA701
50K
RF-1
RF-2
RI-1
RI-2
10K
CI-1
CI-2
0.47uF
AUDIOIN